ITEM NO.	QTY.	PART NO.	DESCRIPTION
1	1	010298	LOWER PLATFORM COVER (CANTILEVER)
2	4	000747	1/4-20 x 3/4 TYPE F PH PAN HD SCREW

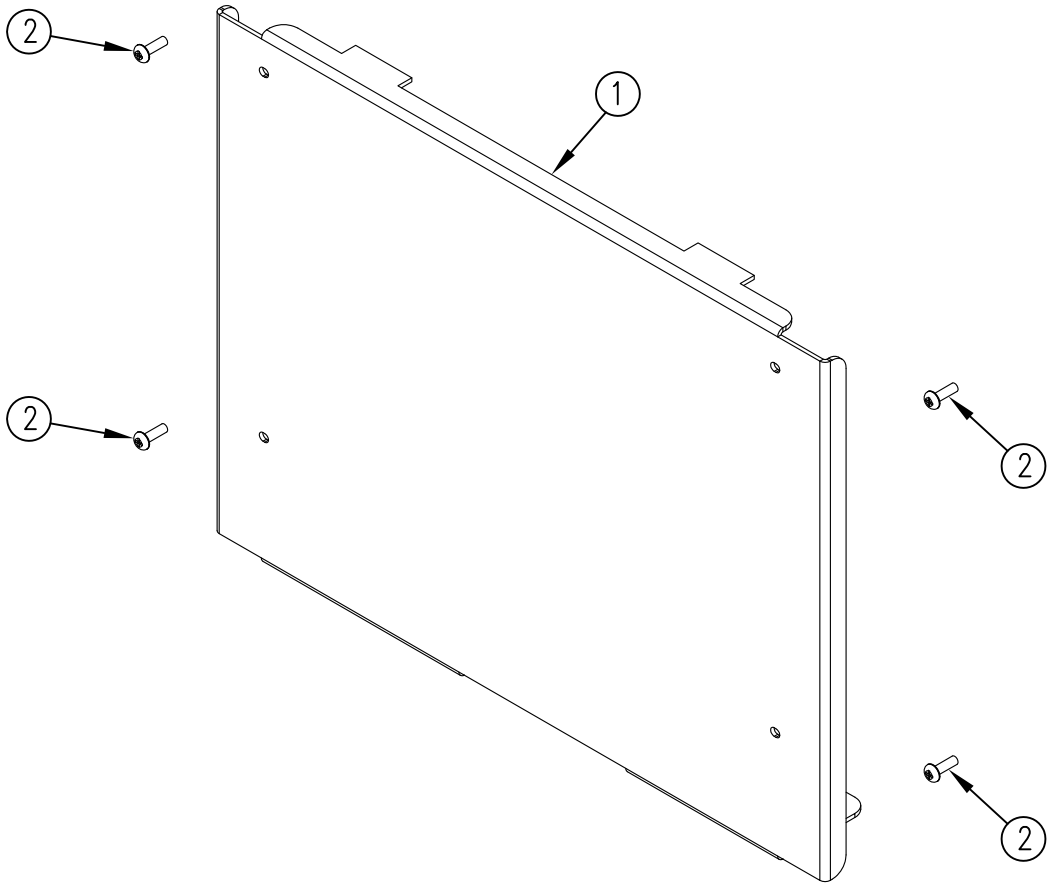

REV.	DATE	CHANGE RECORD	BY	APPVD	ECN
A	11/21/11	RELEASED TO PRODUCTION	JCB		548

THIRD ANGLE PROJECTION

DECIMAL	2PLC	3PLC
MACHINE SAW,DRILL	.030	.015
SHEAR, PUNCH FORM	.060	.030
TORCH, WELDING ROUGH CAST	.090	.060

DRAFT 2° | ANGULAR ±1°

FILENAME:

SYMBOLOGY PER ANSI Y14.5

DRAWN BY. JCB

DRAWN/DATE 11/21/11

APPVD/DATE

NOTES:

WOODBINE MFG. CO.
BUS BROWN DRIVE
WOODBINE, IOWA 51579
712-647-2050
The original TOMMY GATE® hydraulic lift

THE INFORMATION HERE IS CONFIDENTIAL AND MUST NOT BE USED IN ANYWAY DETRIMENTAL TO THE INTEREST OF WOODBINE MFG.

TITLE
REPLACEMENT LOWER PLATFORM COVER (CANTILEVER)

SALES CATEGORY | PRODUCT LINE | SCALE 1:5 | FIN. WT. | PART NO. 11846