ITEM NO.	QTY.	PART NO.	DESCRIPTION
1	1	001902	1/2"DIA.x1-1/2"CHROME SHOULDER BOLT
2	2	001898	.25"x1.25"x6" LUG
3	1	001907	.50"x.75"x1" BRONZE BUSHING
4	1	000553	3/8-16 LARGE FLANGE LOCK NUT
5	1	095150	RAIL SC ARM&LINKAGE ROD INSTR(16/20)

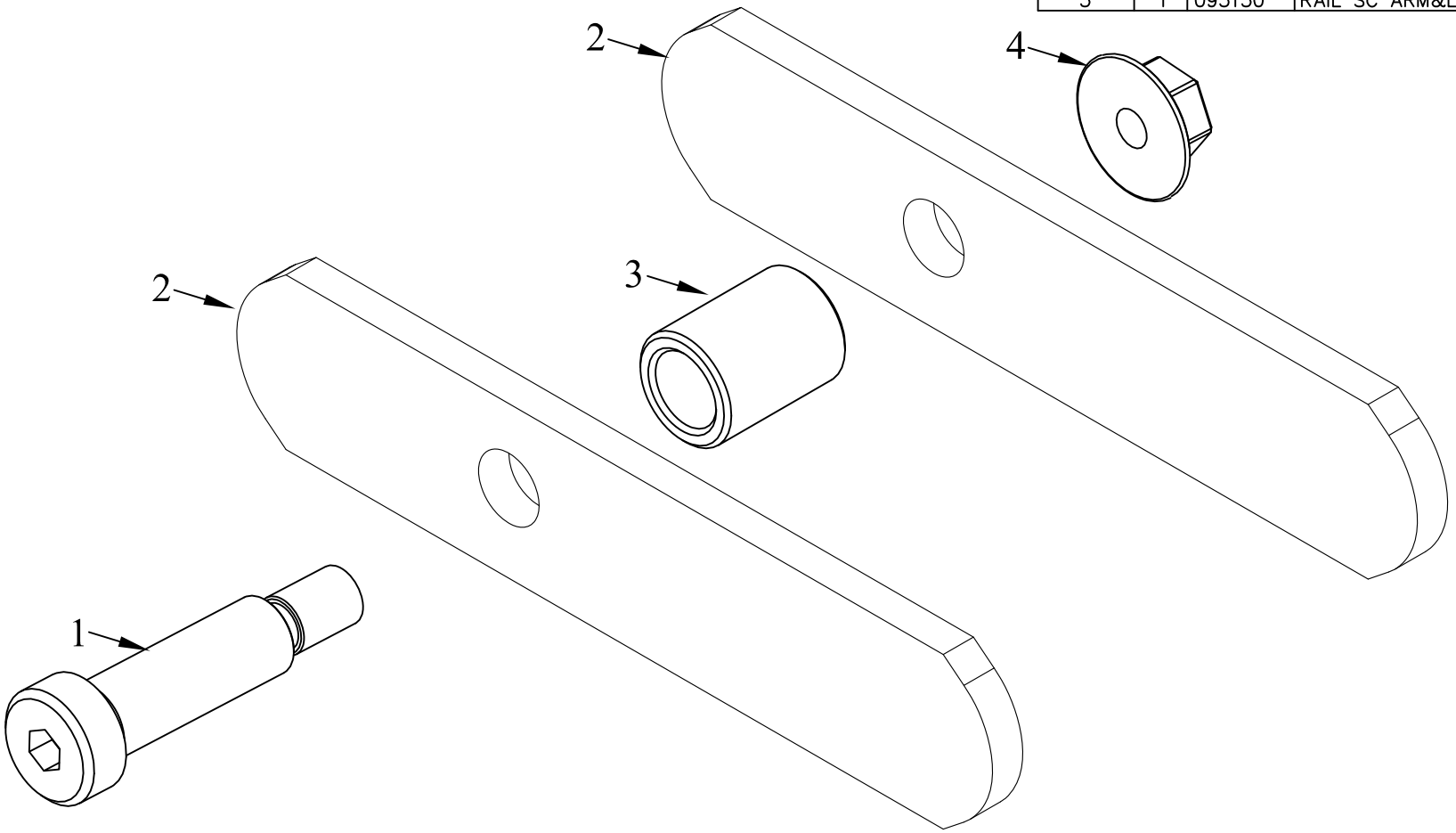

REV.	DATE	CHANGE RECORD	BY	APPVD	ECN
B	1/24/17	ADDED (1) 95150	AAS		1783
A	10/4/07	UPDATED GRAPHIC	JCB	KGJ	

THIRD ANGLE PROJECTION

DECIMAL	2PLC	3PLC
MACHINE SAW,DRILL	.030	.015
SHEAR, PUNCH FORM	.060	.030
TORCH, WELDING ROUGH CAST	.090	.060
DRAFT 2°	ANGULAR ±1°	

FILENAME:

SYMBOLOGY PER ANSI Y14.5

DRAWN BY. DJR

DRAWN/DATE 7/8/03

APPVD/DATE 10/4/07

SALES CATEGORY 45

NOTES:

WOODBINE MFG. CO.
BUS BROWN DRIVE
WOODBINE, IOWA 51579

The original TOMMY GATE hydraulic lift

THE INFORMATION HERE IS CONFIDENTIAL AND MUST NOT BE USED IN ANYWAY DETRIMENTAL TO THE INTEREST OF WOODBINE MFG.

TITLE
REPAIR SELF CLOSE ARM BUSHING KIT-STEEL PLATFORM

PRODUCT LINE	SCALE	FIN. WT.	PART NO.
8950	1:1		8067