ITEM NO.	QTY.	PART NO.	DESCRIPTION
1	1	010647	04MORB-04FPT 90 DEGREE ADAPTER

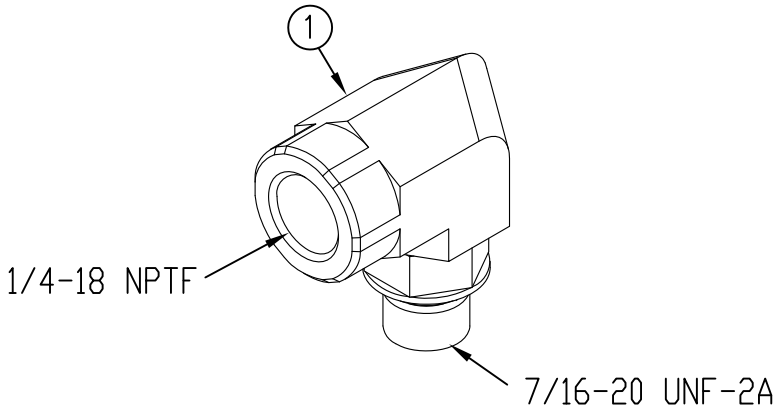

REV.	DATE	CHANGE RECORD	BY	APPVD	ECN
A	7/26/11	RELEASED TO PRODUCTION	JCB		450

THIRD ANGLE PROJECTION

DECIMAL	2PLC	3PLC
MACHINE SAW,DRILL	.030	.015
SHEAR, PUNCH FORM	.060	.030
TORCH, WELDING ROUGH CAST	.090	.060

DRAFT 2° | ANGULAR ±1°

FILENAME:

SYMBOLOGY PER ANSI Y14.5

DRAWN BY. JCB

DRAWN/DATE 7/26/11

APPVD/DATE

NOTES:

WOODBINE MFG. CO.
BUS BROWN DRIVE
WOODBINE, IOWA 51579
712-647-2050
The original TOMMY GATE® hydraulic lift

THE INFORMATION HERE IS CONFIDENTIAL AND MUST NOT BE USED IN ANYWAY DETRIMENTAL TO THE INTEREST OF WOODBINE MFG.

TITLE REPLACEMENT 04MORB-04FPT 90 DEGREE ELBOW

SALES CATEGORY	PRODUCT LINE	SCALE	FIN. WT.	PART NO.
		1:1		11276