ITEM NO.	QTY.	PART NO.	DESCRIPTION
1	1	002659	SUPPORT (25/30)
2	1	000572	3/8" SPRING LOCK WASHER
3	1	000508	3/8-16x3/4"HHCS GR5

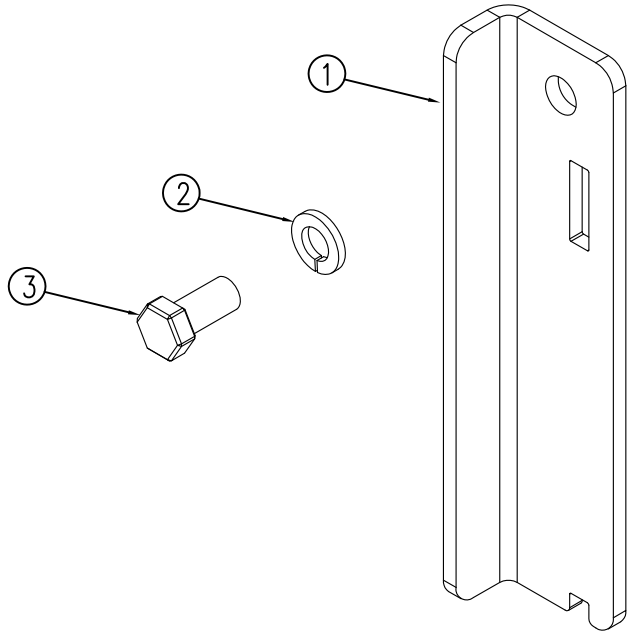

REV.	DATE	CHANGE RECORD	BY	APPVD	ECN
A	10/17/11	RELEASED TO PRODUCTION	JAR		529

THIRD ANGLE PROJECTION

DECIMAL	2PLC	3PLC
MACHINE SAW,DRILL	.030	.015
SHEAR, PUNCH FORM	.060	.030
TORCH, WELDING ROUGH CAST	.090	.060

DRAFT 2° | ANGULAR ±1°

FILENAME:

SYMBOLOGY PER ANSI Y14.5

DRAWN BY. JAR

DRAWN/DATE 10/17/11

APPVD/DATE

SALES CATEGORY

NOTES:

WOODBINE MFG. CO.
BUS BROWN DRIVE
WOODBINE, IOWA 51579
712-647-2050
The original TOMMY GATE® hydraulic lift

THE INFORMATION HERE IS CONFIDENTIAL AND MUST NOT BE USED IN ANYWAY DETRIMENTAL TO THE INTEREST OF WOODBINE MFG.

TITLE REPLACEMENT CYLINDER CLAMP (25/30) RAIL

PRODUCT LINE | SCALE 1:1 | FIN. WT. | PART NO. 11789