ITEM NO.	QTY.	PART NO.	DESCRIPTION
1	1	011229	LATCH BASE LND (G2-50)
2	1	010250	BUMPER 1.25 X 1.25
3	1	000602	10-24 NYLON LOCK NUT
4	1	010251	10-24 X 7/8" SLOT MACHINE SCREW
5	1	000544	1/2-13x4"HHCS GR5
6	1	000588	1/2-13 CROWN LOCK NUT
7	1	011230	LATCH TONGUE LND (G2-50)
8	2	000737	3/8-16 X 1 BUTTON HEAD CAP SCREW ZP
9	2	000553	3/8-16 LARGE FLANGE LOCK NUT

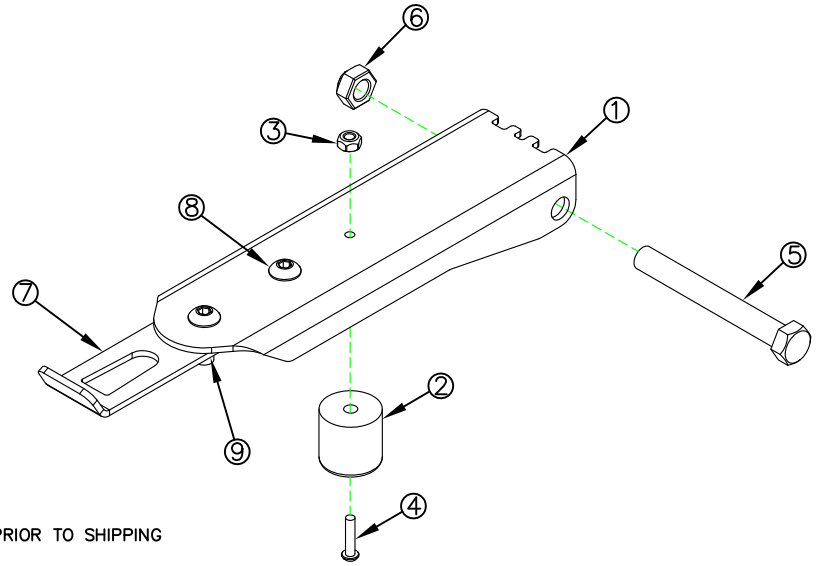

NOTE: ASSEMBLE BASE AND TONGUE PRIOR TO SHIPPING

REV.	DATE	CHANGE RECORD	BY	APPVD	ECN
B	11/11/11	10135 IS NOW 11229, 11230, 737, AND 553; 602 WAS 532	JAR		533
A	1/25/10	DRAWN IN AUTOCAD	JCB		259

THIRD ANGLE PROJECTION

DECIMAL	2PLC	3PLC
MACHINE SAW,DRILL	.030	.015
SHEAR, PUNCH FORM	.060	.030
TORCH, WELDING ROUGH CAST	.090	.060

DRAFT 2° | ANGULAR ±1°

FILENAME:

SYMBOLOGY PER ANSI Y14.5

DRAWN BY. JCB

DRAWN/DATE 1/25/10

APPVD/DATE

SALES CATEGORY

NOTES:

TITLE G2 (LD) REPLACEMENT LATCH KIT-LEFT

PRODUCT LINE | SCALE 1:3 | FIN. WT. 1.02 | PART NO. 10460

WOODBINE MFG. CO.
BUS BROWN DRIVE
WOODBINE, IOWA 51579
712-647-2050
The original TOMMY GATE hydraulic lift

THE INFORMATION HERE IS CONFIDENTIAL AND MUST NOT BE USED IN ANYWAY DETRIMENTAL TO THE INTEREST OF WOODBINE MFG.