ITEM NO.	QTY.	PART NO.	DESCRIPTION
1	1	005516	MASTERLOCK PADLOCK W/ KEYS
2	1	007744	LATCH LOCK PIN (RAIL)

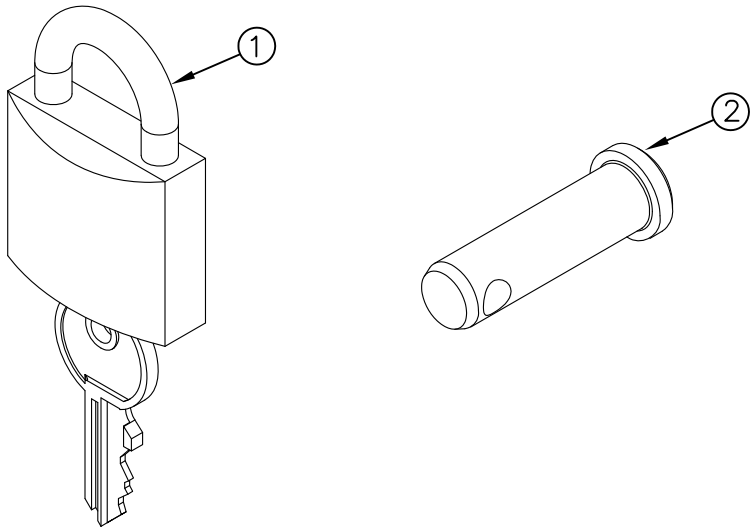

REV.	DATE	CHANGE RECORD	BY	APPVD	ECN
A	10/16/07	DRAWN IN AUTOCAD	JCB	KGJ	

THIRD ANGLE PROJECTION

DECIMAL	2PLC	3PLC
MACHINE SAW,DRILL	.030	.015
SHEAR, PUNCH FORM	.060	.030
TORCH, WELDING ROUGH CAST	.090	.060

DRAFT 2° | ANGULAR ±1°

FILENAME:

SYMBOLOGY PER ANSI Y14.5

DRAWN BY. JCB

DRAWN/DATE 10/16/07

APPVD/DATE 10/16/07

NOTES:

WOODBINE MFG. CO.
BUS BROWN DRIVE
WOODBINE, IOWA 51579
712-647-2050

The original TOMMY GATE® hydraulic lift

THE INFORMATION HERE IS CONFIDENTIAL AND MUST NOT BE USED IN ANYWAY DETRIMENTAL TO THE INTEREST OF WOODBINE MFG.

TITLE 3/8" RAIL PIN AND PADLOCK W/ KEYS

SALES CATEGORY	PRODUCT LINE	SCALE	FIN. WT.	PART NO.
45	3711	1:1		914