ITEM NO.	QTY.	PART NO.	DESCRIPTION
1	1	010940	MONARCH PUMP AND 650 TANK (FOR REPAIR)
2	1	004403*	VENT PLUG
3	0.281 GAL.	009034	HYDRAULIC OIL
4	1	009089	16–14 HEAT SHRINK BUTT CONNECTOR
5	1	003149	LONG FORGED ELBOW (650)

*ACCOUNTING–DO NOT USE FOR B.O.M.

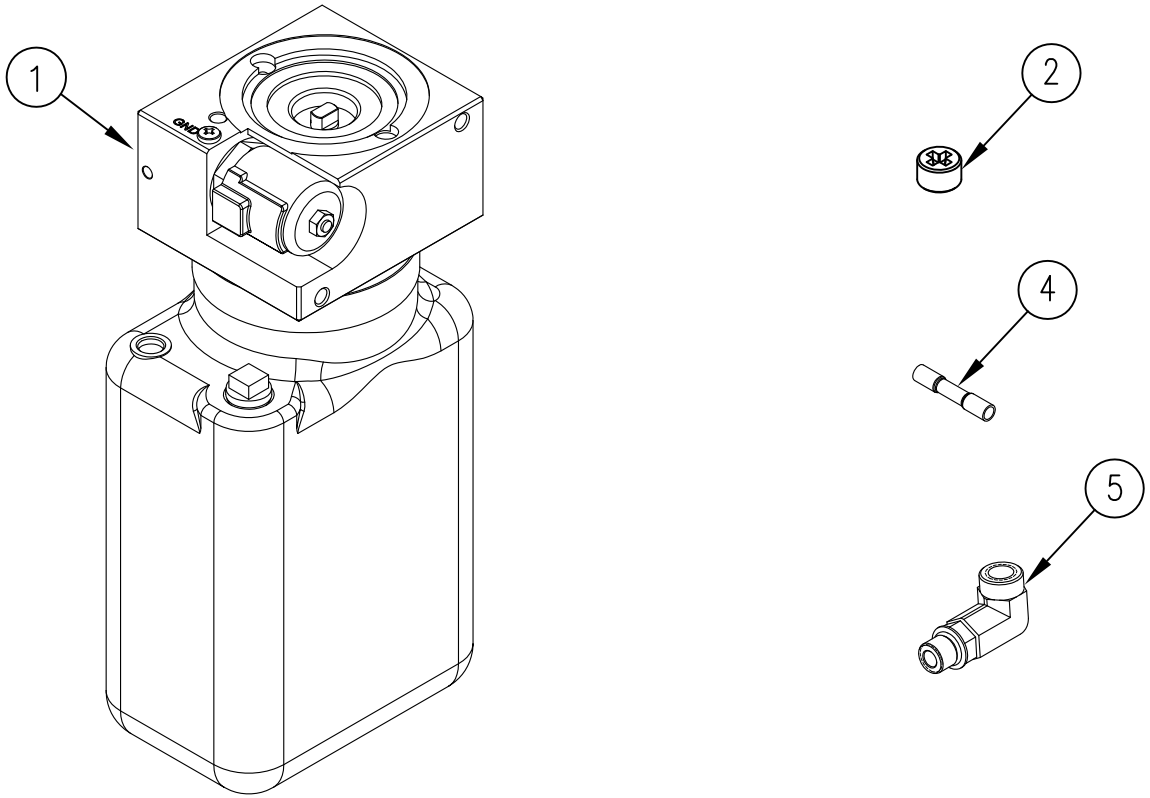

REV.	DATE	CHANGE RECORD	BY	APPVD	ECN
B	11/17/10	REPLACED 4195, 4194, AND 1496 WITH 10940; ADDED (1) 9089 AND (1) 3149	JCB		370

THIRD ANGLE PROJECTION

DECIMAL	2PLC	3PLC
MACHINE SAW,DRILL	.030	.015
SHEAR, PUNCH FORM	.060	.030
TORCH, WELDING ROUGH CAST	.090	.060

DRAFT 2° | ANGULAR ±1°

FILENAME:

SYMBOLOGY PER ANSI Y14.5

DRAWN BY. DJR

DRAWN/DATE 8/19/05

APPVD/DATE

NOTES:

WOODBINE MFG. CO.
BUS BROWN DRIVE
WOODBINE, IOWA 51579
712–647–2050

The original TOMMY GATE® hydraulic lift

THE INFORMATION HERE IS CONFIDENTIAL AND MUST NOT BE USED IN ANYWAY DETRIMENTAL TO THE INTEREST OF WOODBINE MFG.

TITLE: PUMP (ONLY) W/TANK (1550PSI)650

SALES CATEGORY	PRODUCT LINE	SCALE	FIN. WT.	PART NO.
		1:3		1215