ITEM NO.	QTY.	PART NO.	DESCRIPTION
1	1	015190	PLATFORM COMPLETE INTERNAL VAN FA49
2	1	015143	1/2"SQ.x46" TORSION SPRING INTERNAL
3	1	015428	PLATED SPRING HOLDER WELDMENT (DR) V2
4	2	000509	3/8-16x1" HHCS GR5
5	6	000550	3/8-16 GR5 HEX NUT
6	6	000572	3/8" SPRING LOCK WASHER
7	1	015200	1" EXTERNAL PLATED SNAP RING-HEAVY
8	1	015206	SNAP RING WASHER-ZINC PLATED
9	1	014466	3/16"DIA.x1" ROLL PIN PLATED
10	1	015528	PLATED .75"ODx.88"SPACER V2
11	2	015330	1" NARROW RIM MACHINE BUSHING-ZP
12	1	015205	PLATED 12GA.x1.75"OD HINGE WASHER
13	7	016419	#14X3/4" TRUSS HD SHEET METAL SCREW, ZP
14	1	015561	14GA.x5.88"x45"PLATFORM HINGE COVER (V2)
15	1	000516	3/8-16x2" HHCS GR5
16	2	015389	7GA.x2.50"x3.50"PLATFORM STOP ANGLE
17	2	015775	1/4-20x1-1/2" PH PAN HD MS
18	4	000508	3/8-16x3/4" HHCS GR5
19	2	001210	PLASTIC PLATFORM BUMPER STOP(RAIL)
20	2	011081	1/4-20 KEPS NUT ZINC
21	1	015800	DECAL SHEET-V2
22	1	009511	TOMMY GATE NAME DECAL - BLACK & GRAY
23	4	015616	PLATFORM STOP SPACER (V2)
24	1	095289	FA49 PLATFORM REPAIR/REPLACEMENT INST.

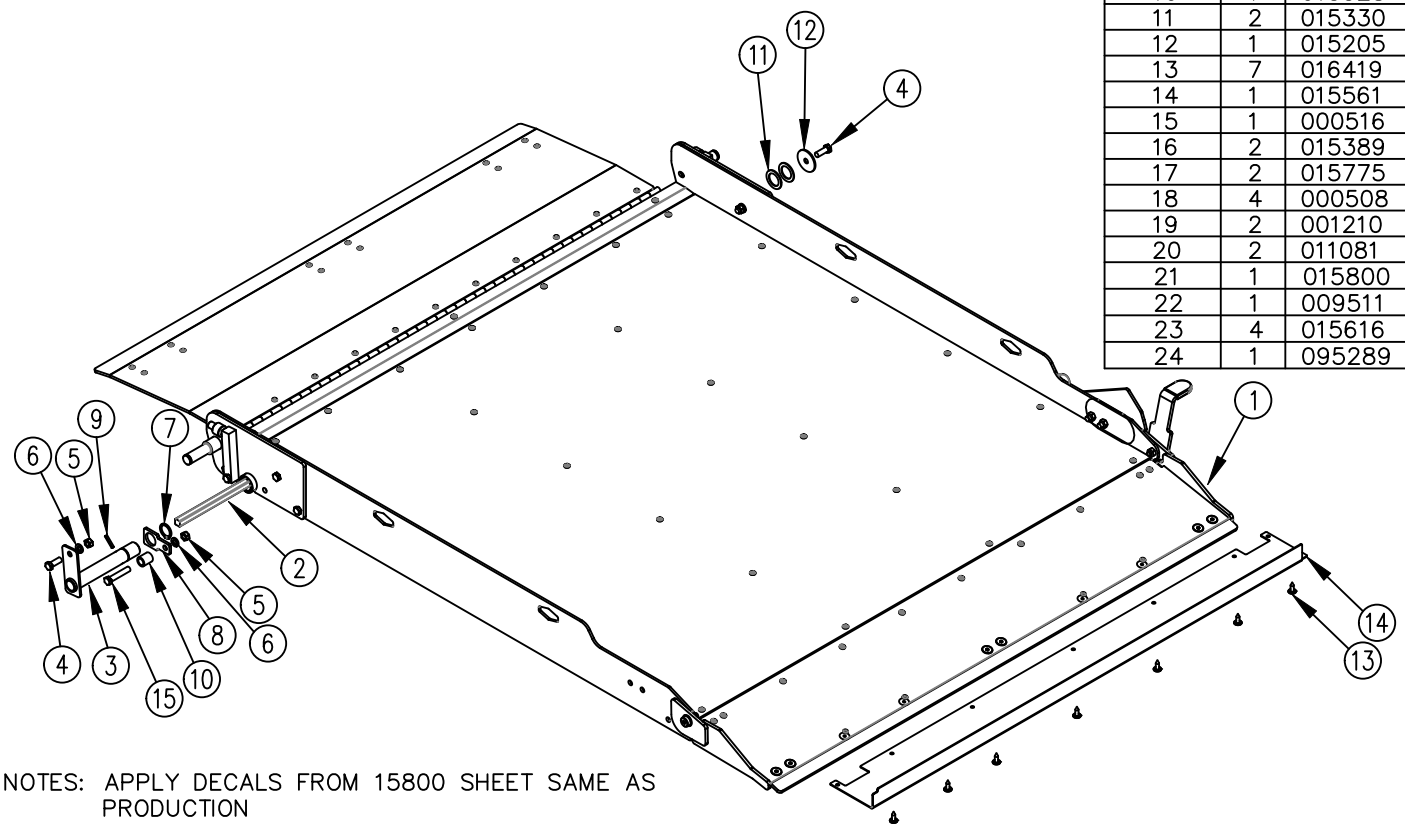

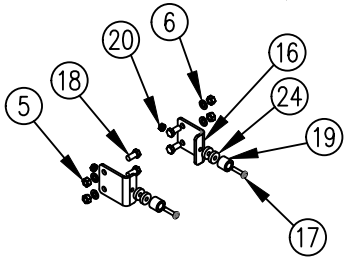

NOTES: APPLY DECALS FROM 15800 SHEET SAME AS PRODUCTION

REV.	DATE	CHANGE RECORD	BY	APPVD	ECN
C.1	6/15/20	CORRECTED INSTRUCTION SET LISTED IN BOM, 095289 WAS 095290	GDB		
C	3/25/20	16419 WAS 15429; ADDED (4) 15616; 15775 WAS 504	JCB		2453
B	11/22/19	ADDED 15800 AND 9511	AAS		2383
A	7/3/19	RELEASED TO PRODUCTION	GDB		2221

THIRD ANGLE PROJECTION

UNLESS OTHERWISE SPECIFIED
DIMENSIONS ARE IN INCHES
TOLERANCES:
FRACTIONAL ±1/16
ANGULAR MACH ±1°
BEND ±1°
TWO PLACE DECIMAL ±0.030
THREE PLACE DECIMAL ±0.010

DRAWN BY GDB
DRAWN/DATE 7/3/19
APPVD/DATE —
DO NOT SCALE DRAWING

NOTES:

WOODBINE MFG. CO.
BUS BROWN DRIVE
WOODBINE, IOWA 51579
The original TOMMY GATE hydraulic lift

TITLE
REPLACEMENT V2 FA 49 PLATFORM

THE INFORMATION HERE IS CONFIDENTIAL AND MUST NOT BE USED IN ANY WAY DETRIMENTAL TO THE INTEREST OF WOODBINE MFG.

SCALE 1:14 | WEIGHT — | PART NO. 16134