ITEM NO.	QTY.	PART NO.	DESCRIPTION
1	1	10131	40" TRAVEL CABLE CHAIN W/ CLOTH CHAIN COVER
2	2	605	3/8-16 USS CROWN LOCK NUT

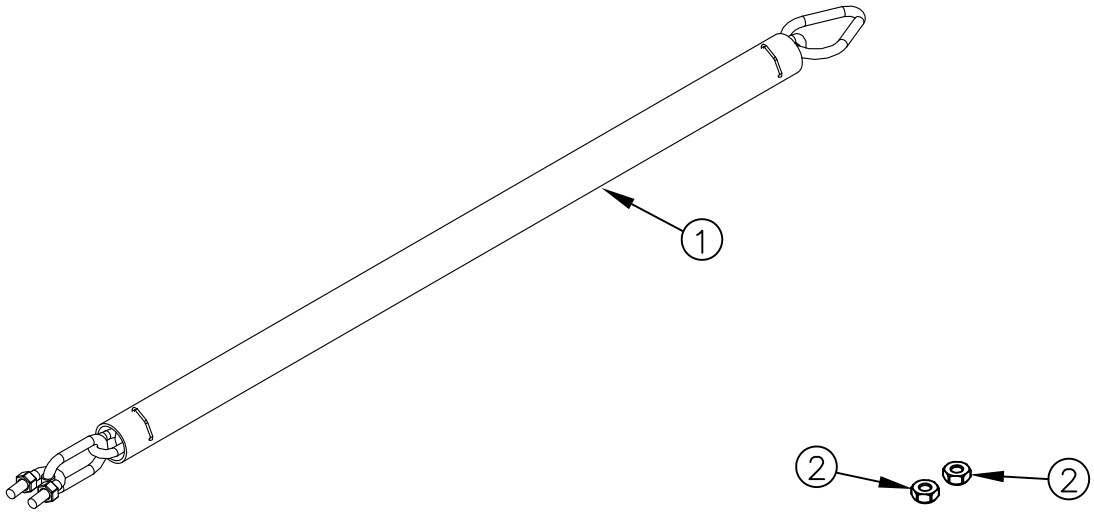

REV.	DATE	CHANGE RECORD	BY	APPVD	ECN
C	9/29/09	CHANGED TO REFLECT PRODUCTION	LSB	LSB	206

THIRD ANGLE PROJECTION

DECIMAL	2PLC	3PLC
MACHINE SAW,DRILL	.030	.015
SHEAR, PUNCH FORM	.060	.030
TORCH, WELDING ROUGH CAST	.090	.060

DRAFT 2° | ANGULAR ±1°

FILENAME: KITS(Repair Parts)\Cablegate\003842

SYMBOLOGY PER ANSI Y14.5

DRAWN BY. DJR

DRAWN/DATE 11/19/04

APPVD/DATE 3/5/07

NOTES:

WOODBINE MFG. CO.
BUS BROWN DRIVE
WOODBINE, IOWA 51579
712-647-2050
The original TOMMY GATE® hydraulic lift

THE INFORMATION HERE IS CONFIDENTIAL AND MUST NOT BE USED IN ANYWAY DETRIMENTAL TO THE INTEREST OF WOODBINE MFG.

TITLE 1340, ENG, AND LP REPL PLATFORM CHAIN(18LNK)

SALES CATEGORY	PRODUCT LINE	SCALE	FIN. WT.	PART NO.
45	1801	1:4		3842