ITEM NO.	QTY.	PART NO.	DESCRIPTION
1	6	012834	ZINC PLATED PLATFORM SHIM (TUCKUNDER)
2	8	010502	5/16-18X1" HHCS GRADE 5 BOLT
3	8	000606	5/16-18 USS CROWN LOCK NUT

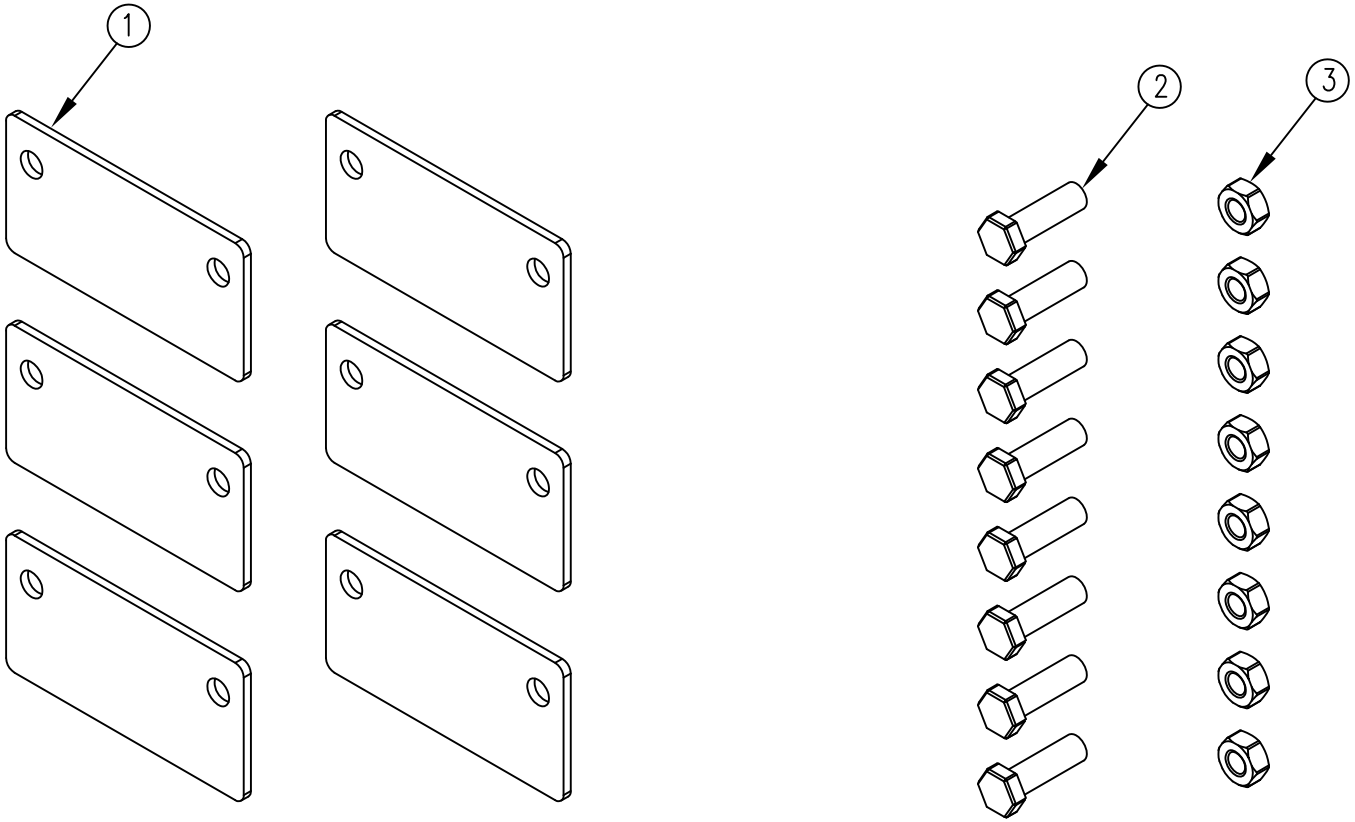

REV.	DATE	CHANGE RECORD	BY	APPVD	ECN
B	5/8/24	"SHIM" WAS "SHIP" IN DESCRIPTION	JCB		2998
A	3/13/14	RELEASED TO PRODUCTION	JCB		1075

THIRD ANGLE PROJECTION

DECIMAL	2PLC	3PLC
MACHINE SAW,DRILL	.030	.015
SHEAR, PUNCH FORM	.060	.030
TORCH, WELDING ROUGH CAST	.090	.060

DRAFT 2° | ANGULAR ±1°

FILENAME:

SYMBOLOGY PER ANSI Y14.5

DRAWN BY. JCB

DRAWN/DATE 3/13/14

APPVD/DATE

SALES CATEGORY

NOTES:

WOODBINE MFG. CO.
BUS BROWN DRIVE
WOODBINE, IOWA 51579

TOMMY GATE

THE INFORMATION HERE IS CONFIDENTIAL AND MUST NOT BE USED IN ANYWAY DETRIMENTAL TO THE INTEREST OF WOODBINE MFG.

TITLE
REPLACEMENT PLATFORM SHIM KIT (TUCKUNDER)

PRODUCT LINE | SCALE 1:2 | FIN. WT. | PART NO. 12950