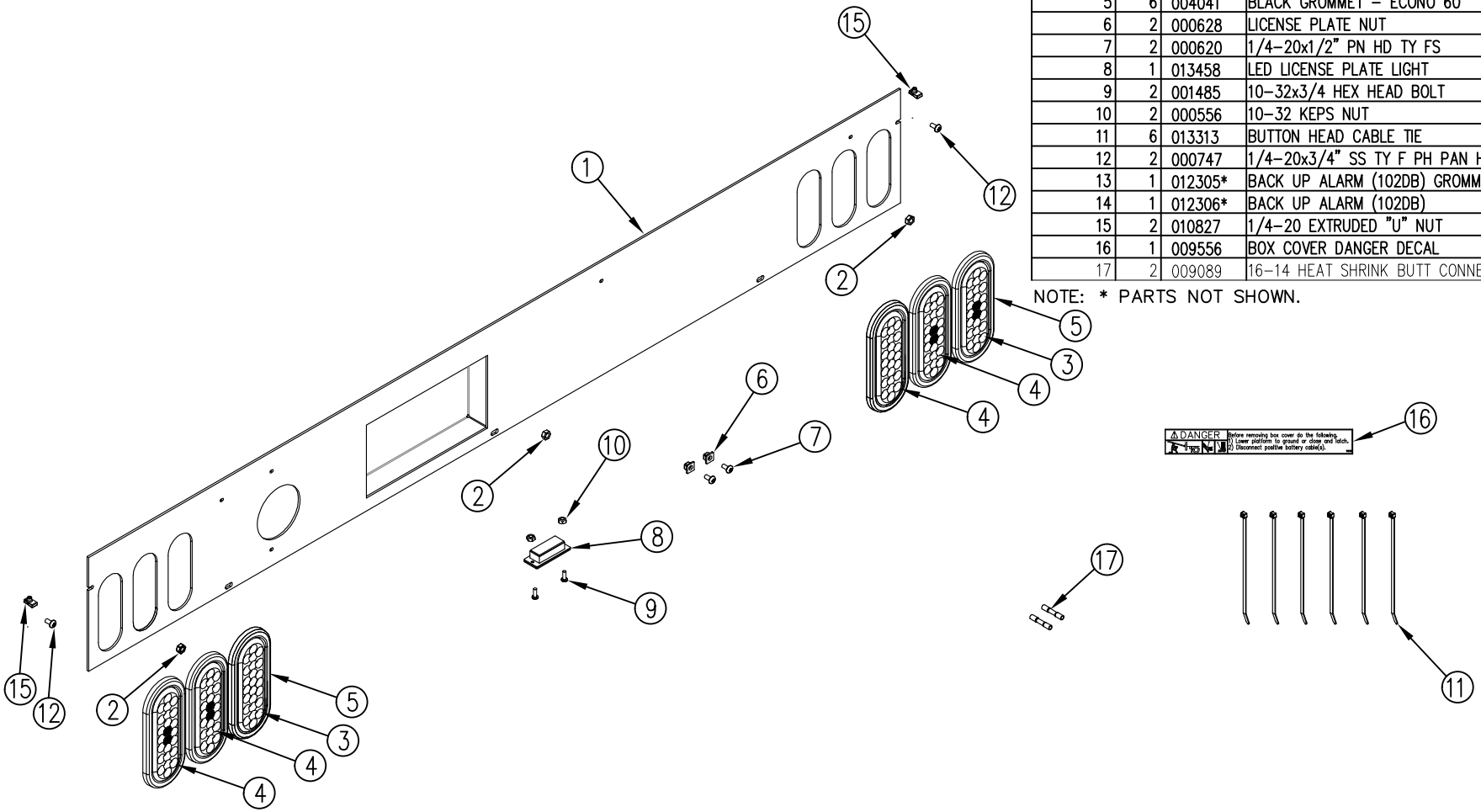

ITEM NO.	QTY.	PART NO.	DESCRIPTION
1	1	013808	ALUM RAIL BOXCOVER WELDMENT(85)TX(BA)
2	3	000631	5/16-18 SERRATED FLANGENUT (WHIZLOCK)
3	2	004119	RAIL CLEAR LIGHT 12-VOLT (LED)
4	4	004046	RAIL RED LIGHT 12-VOLT (LED)
5	6	004041	BLACK GROMMET - ECONO 60
6	2	000628	LICENSE PLATE NUT
7	2	000620	1/4-20x1/2" PN HD TY FS
8	1	013458	LED LICENSE PLATE LIGHT
9	2	001485	10-32x3/4 HEX HEAD BOLT
10	2	000556	10-32 KEPS NUT
11	6	013313	BUTTON HEAD CABLE TIE
12	2	000747	1/4-20x3/4" SS TY F PH PAN HD
13	1	012305*	BACK UP ALARM (102DB) GROMMET AND PLUG
14	1	012306*	BACK UP ALARM (102DB)
15	2	010827	1/4-20 EXTRUDED "U" NUT
16	1	009556	BOX COVER DANGER DECAL
17	2	009089	16-14 HEAT SHRINK BUTT CONNECTOR

NOTE: * PARTS NOT SHOWN.

REV.	DATE	CHANGE RECORD	BY	APPVD	ECN
C	5/13/15	REPLACED 9077 W/ 13313	GDB		1391
B	9/18/14	REPLACED INCANDECENT LIGHTS(4042,4043) WITH LED(4119,4046)	AAS		1202
A.1	6/16/14	CORRECTED BOM ERROR, 13808 WAS 13812	GDB		
A	4/30/14	RELEASED TO PRODUCTION	GDB		1113

THIRD ANGLE PROJECTION

DECIMAL	2PLC	3PLC
MACHINE SAW,DRILL	.030	.015
SHEAR, PUNCH FORM	.060	.030
TORCH, WELDING ROUGH CAST	.090	.060

DRAFT 2° ANGULAR ±1°

FILENAME:

SYMBOLOGY PER ANSI Y14.5

DRAWN BY. GDB

DRAWN/DATE 4/30/14

APPVD/DATE

SALES CATEGORY

NOTES:

WOODBINE MFG. CO.
BUS BROWN DRIVE
WOODBINE, IOWA 51579
712-647-2050
The original TOMMY GATE hydraulic lift

THE INFORMATION HERE IS CONFIDENTIAL AND MUST NOT BE USED IN ANYWAY DETRIMENTAL TO THE INTEREST OF WOODBINE MFG.

TITLE
REPLACEMENT SELF CLOSE BOX COVER (85)TX (BA)

PRODUCT LINE | SCALE 1:6 | FIN. WT. | PART NO. 013824