| ITEM NO. | QTY. | PART NO. | DESCRIPTION |
|---|---|---|---|
| 1 | 1 | 015119 | 8MORB x6MORB 90 DEGREE STEEL ELBOW |
| 2 | 1 | 010577 | 6MORB x4MJIC 90 DEGREE STEEL ELBOW |

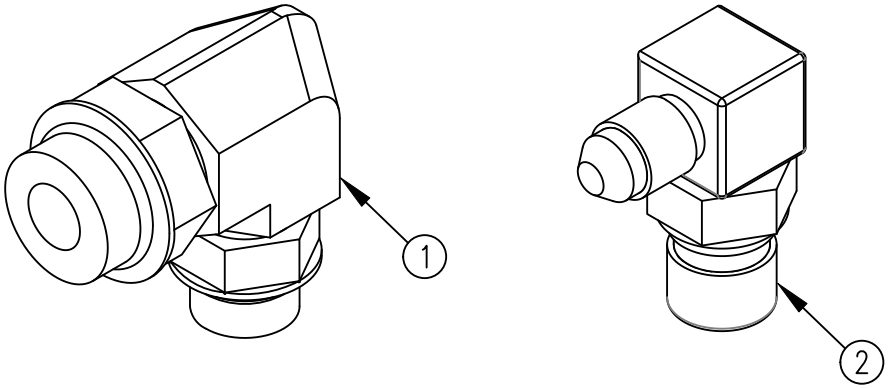


| REV. | DATE | CHANGE RECORD | BY | APPVD | ECN |
|---|---|---|---|---|---|
| B | 6/4/20 | ADDED (1) 10577 | GDB | | 2467 |
| A | 5/17/19 | RELEASED TO PRODUCTION | GDB | | 2221 |

THIRD ANGLE PROJECTION

UNLESS OTHERWISE SPECIFIED

DIMENSIONS ARE IN INCHES
TOLERANCES:
FRACTIONAL ±1/16
ANGULAR MACH ±1°
BEND ±1°
TWO PLACE DECIMAL ±0.030
THREE PLACE DECIMAL ±0.010

DRAWN BY GDB

DRAWN/DATE 5/17/19

APPVD/DATE —

DO NOT SCALE DRAWING

NOTES:

WOODBINE MFG. CO.
BUS BROWN DRIVE
WOODBINE, IOWA 51579

The original TOMMY GATE hydraulic lift

TITLE
REPLACEMENT V2 PUMP ELBOW 90 DEG

THE INFORMATION HERE IS CONFIDENTIAL AND MUST NOT BE USED IN ANY WAY DETRIMENTAL TO THE INTEREST OF WOODBINE MFG.

SCALE 1:1 | WEIGHT — | PART NO. 16111